DeckHand 40

2-year warranty

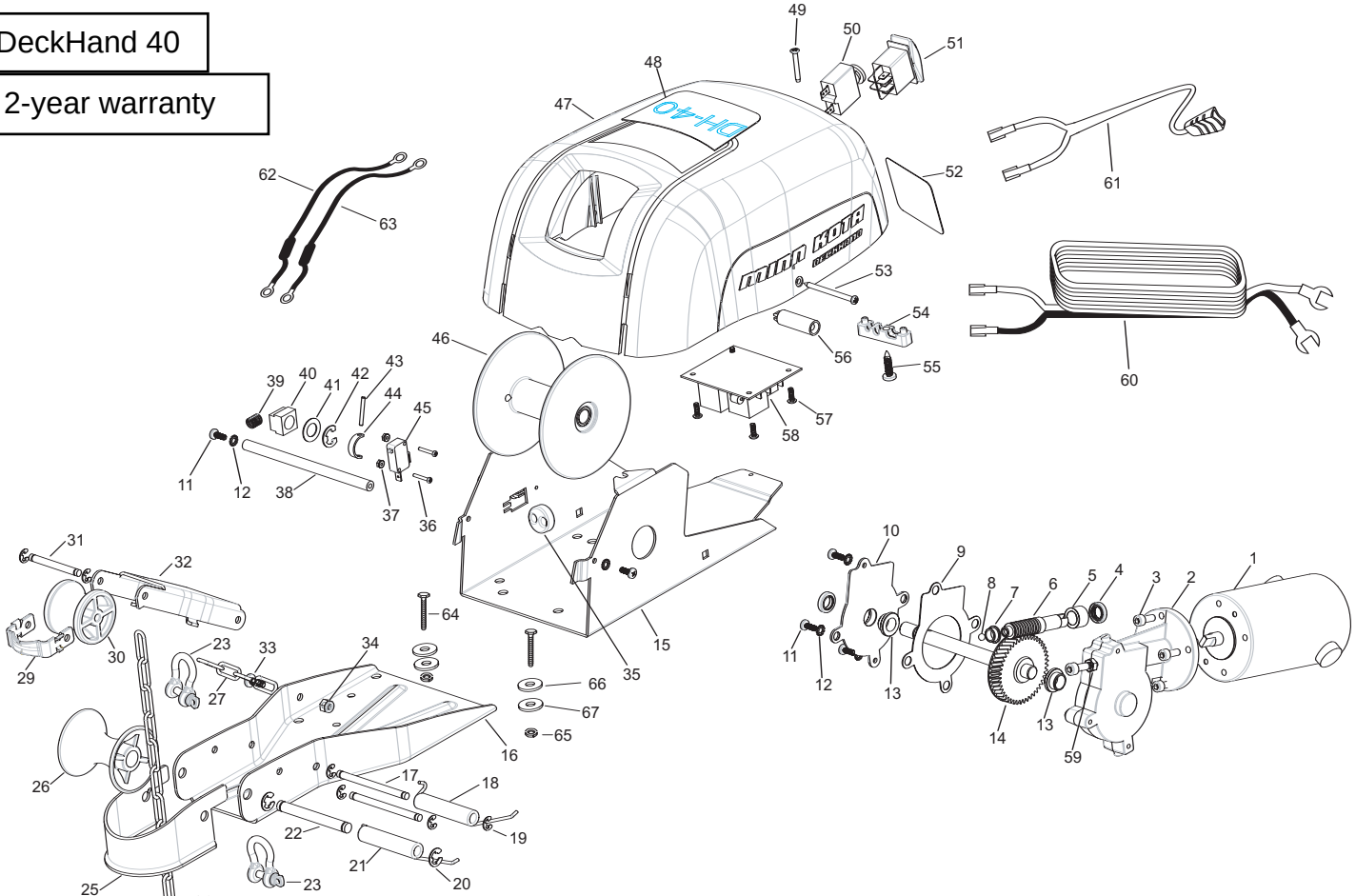


Click here to order parts. www.warnersdockonline.com

888-222-3625

| Item | Part | Description |
|---|---|---|
| ■ | 2997816 | MOTOR/GEAR ASSEMBLY (Includes items 1-10,13,14) |
| *1 | 2377802 | MOTOR |
| *2 | 2376502 | GEAR BOX |
| 3 | 2373448 | SCREW M6X1.0 X16mm [5 EA.] |
| 4 | 880-026 | SEAL [2 EA.] |
| 5 | 2370041 | BRONZE BUSHING |
| *6 | 2372238 | WORM GEAR |
| 7 | 2377300 | BRONZE BUSHING 3/8” SHAFT |
| *8 | 2376000 | BALL-THRUST |
| 9 | 2376915 | GASKET |
| 10 | 2376515 | GEAR BOX COVER |
| 11 | 2223455 | SCREW #10-32 X 1/2” [6 EA.] |
| 12 | 2261718 | WASHER-#10 EXT. LW [6 EA.] |
| 13 | 2227304 | BRONZE BUSHING 1/2” SHAFT [2 EA.] |
| *14 | 2372254 | GEAR SHAFT |
| 15 | 2371901 | BASE |
| ■ | 2998410 | DAVIT ASSEMBLY (Includes items 16-22, 25-34) |
| *16 | 2376505 | DAVIT CHASSIS |
| 17 | 2372607 | HINGE PIN [2 EA.] |
| 18 | 2372712 | TORSION SPRING |
| 19 | 2013000 | E-RING [6 EA.] |
| 20 | 2263010 | E-RING [2 EA.] |
| 21 | 2372713 | TORSION SPRING |
| 22 | 2372606 | AXLE PIN |
| 23 | 2370806 | SHACKLE [2 EA.] |
| 24 | 2370820 | CHAIN |
| 25 | 2371613 | LOWER LINE GUIDE |
| 26 | 2372311 | ROLLER-LARGE |
| 27 | 2370801 | SAFETY LANYARD |
| 29 | 2371614 | UPPER LINE GUIDE |
| 30 | 2372306 | ROLLER-SMALL |
| 31 | 2372601 | AXLE PIN |
| 32 | 2374210 | LIFTING ARM |
| 33 | 2373402 | SCREW-1/4-20X5/8” |
| 34 | 2263103 | NUT- 1/4” NYLOC |
| 35 | 2373200 | ROPE STOP |
| 36 | 2372130 | SCREW-#4-40 X 3/4” [2 EA.] |
| 37 | 2373100 | NUT-#4-40 KEPS [2 EA.] |
| 38 | 2371612 | LINE GUIDE |
| 39 | 2372700 | COIL SPRING |
| 40 | 2370001 | SPOOL BEARING |
| 41 | 990-051 | WASHER |
| 42 | 788-040 | E-RING |
| 43 | 2092601 | DRIVE PIN |
| 44 | 2372630 | PIN KEEPER |
| 45 | 2374010 | SWITCH |
| 46 | 2377901 | SPOOL W/ROPE |
| 47 | 2370202 | COVER |
| 48 | 2375505 | DECAL-TOP COVER |
| 49 | 2372123 | SCREW-#8-32 X 1.25” |
| 50 | 2378203 | CIRCUIT BREAKER |
| 51 | 2374001 | SWITCH |
| 52 | 2375504 | DECAL- MFR. NOTICE |
| 53 | 2372122 | SCREW-#10-16 X 2 1/2” [2 EA.] |
| 54 | 2222905 | STRAIN RELIEF |
| 55 | 2373446 | SCREW- 1/4-20 X 1” [2.EA] |
| 56 | 2372920 | STANDOFF [2 EA.] |
| 57 | 2372100 | SCREW- #8-10 X 5/8”[4 EA.] |
| 58 | 2378225 | CIRCUIT BOARD ASSEMBLY |
| 59 | 2373105 | HEX NUT M6X1.0 |
| 60 | 2090601 | LEADWIRE |
| 61 | 2370703 | CONTROL CORD |
| 62 | 2370704 | JUMPER WIRE #20GA BLUE |
| 63 | 2370706 | JUMPER WIRE #10GA RED |
| ■ | 2994853 | BAG ASSEMBLY |
| 64 | 2153501 | 5/16” -18 BOLT [8 EA.] |
| 65 | 2153100 | NUT- 5/16-18” [8 EA.] |
| 66 | 2301720 | WASHER RUBBER [8 EA.] |
| 67 | 2151726 | WASHER 5/16” [8 EA.] |

Click here to order parts.
www.warnersdockonline.com
888/222-3625

* This item is part of an assembly. This item cannot be sold separately due to machining and /or assembly that is required.

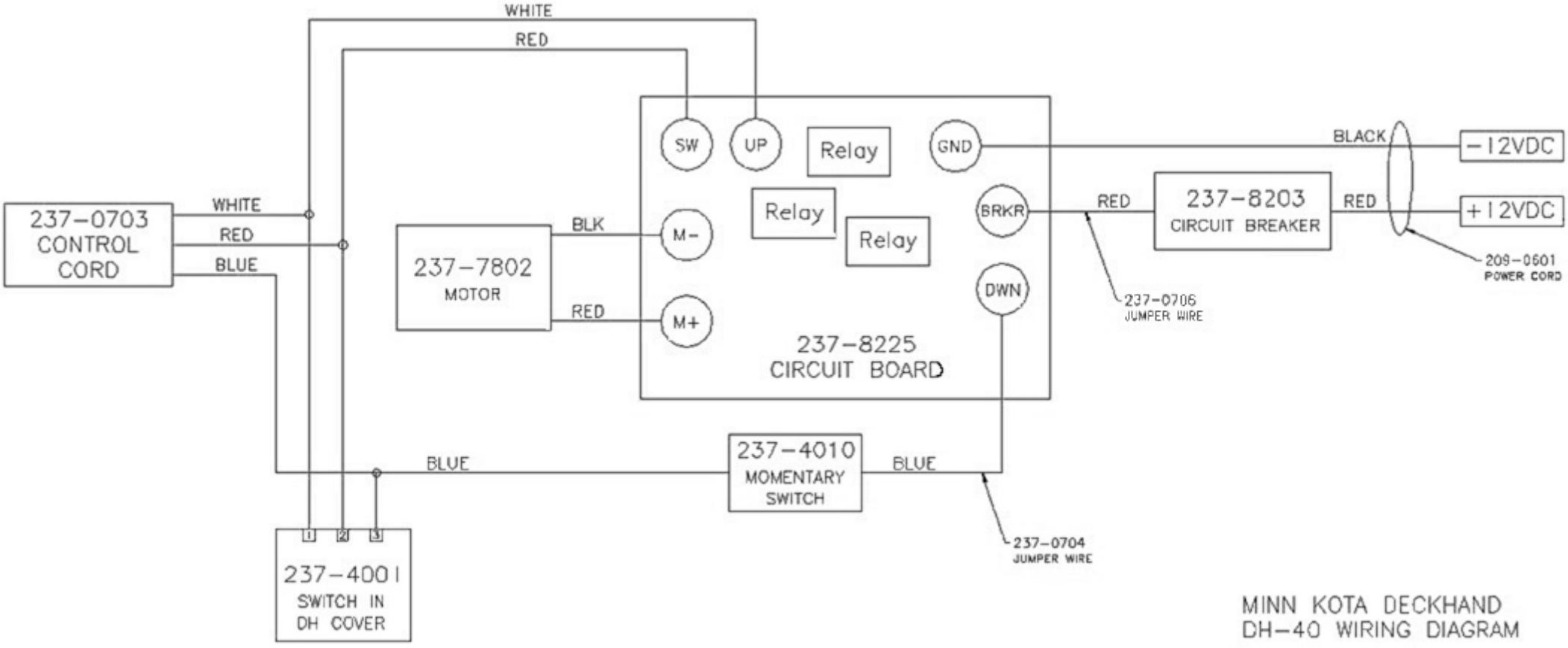


MINN KOTA DECKHAND
DH-40 WIRING DIAGRAM